RV-10

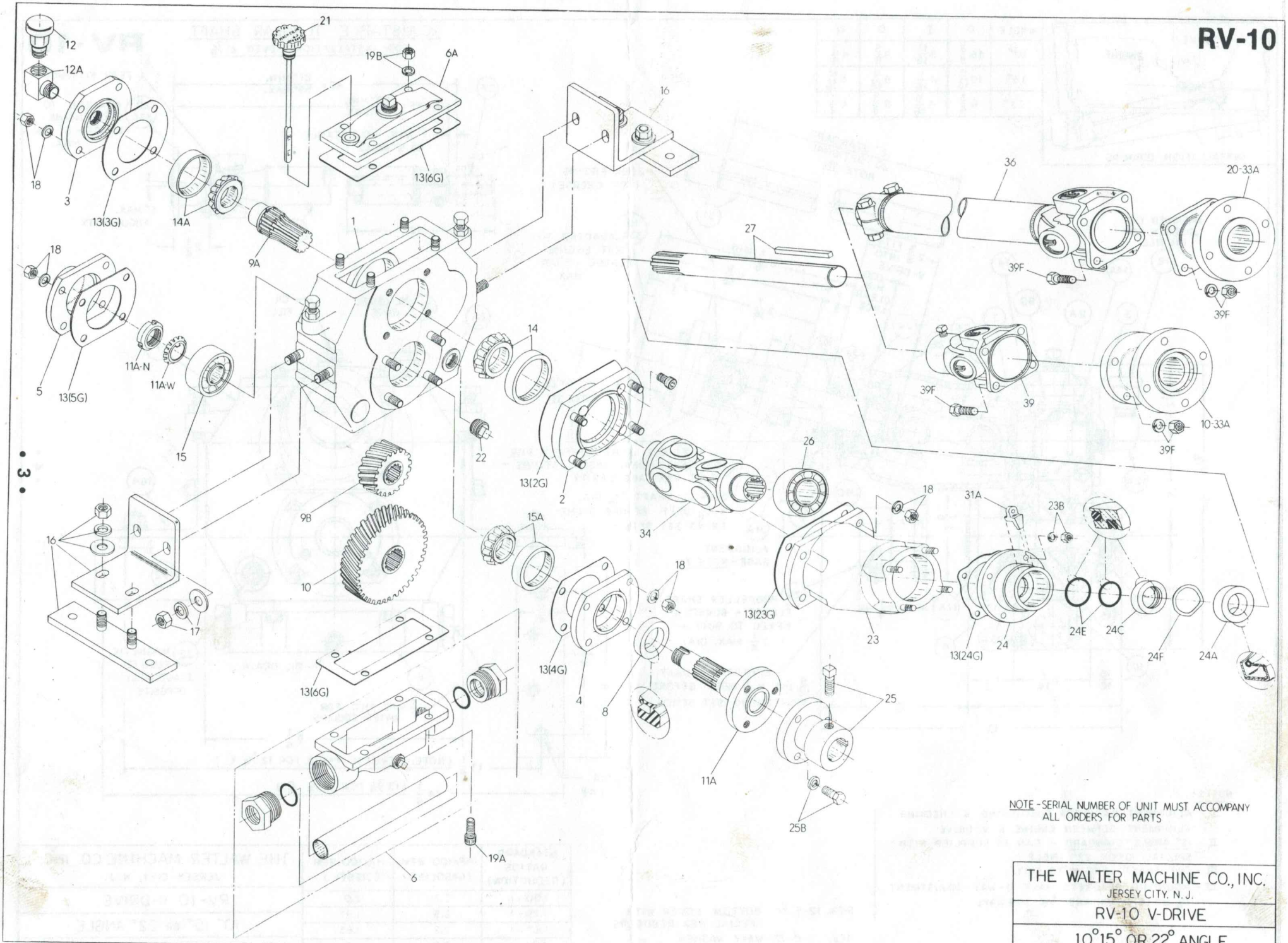

NOTE - SERIAL NUMBER OF UNIT MUST ACCOMPANY ALL ORDERS FOR PARTS

THE WALTER MACHINE CO., INC.
JERSEY CITY, N. J.

RV-10 V-DRIVE

10°, 15° OR 22° ANGLE